Fuel Level Probe
Type CS-25/I; CS-25/U; CS-25/RS

- ✓ **Measuring range 0÷800 mm H_2O**
- ✓ **Ministry of Transport Type Approval**
  Certificate No.
  E20 10R-02 2086 (CS-25/I, CS-25/U)
  E20 10R-02 2085 (CS-25/RS)

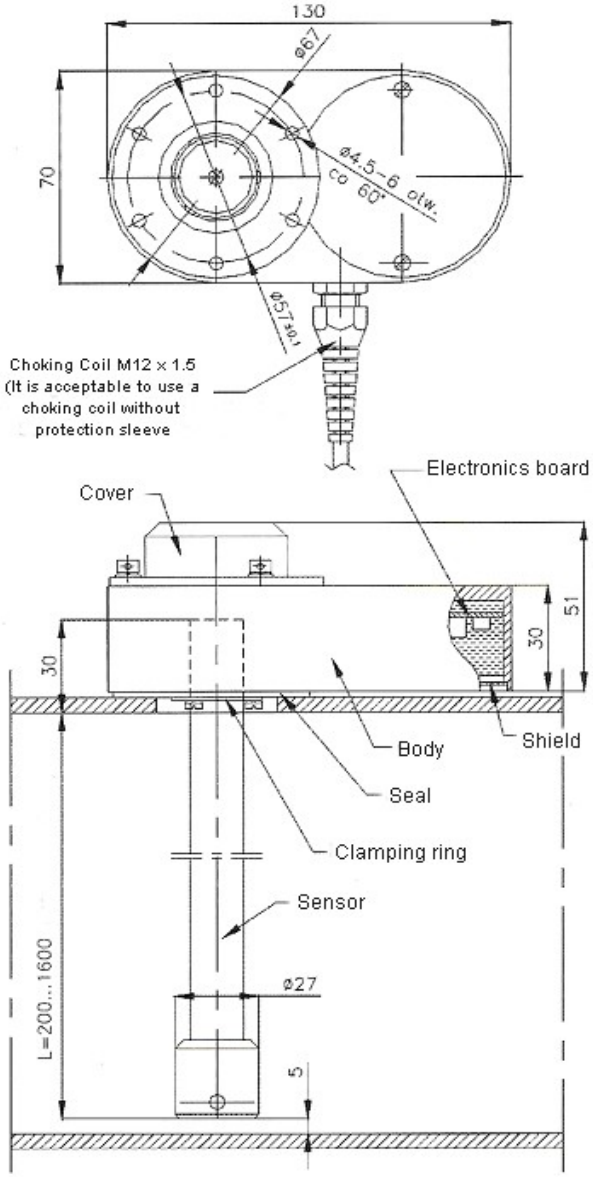

Function

The CS-25 Fuel level probe is used to measure fuel level in the tanks of motor vehicles, working-machines and locomotives. The probes have been officially approved by the Ministry of Transport.

Structure and Operation

The measurement of fuel level with the CS-25 probe is performed with the use of a simple relation between the height of liquid column and the produced hydrostatic pressure. The probe is composed of two parts: the sensing element, placed inside a steel rod, and the electronic element, located inside aluminum housing which can be sealed. The measuring element is a piezoresistive sensor, separated from the medium by a separating membrane. Pressure measuring is performed at the membrane of the submerged probe (5 mm above tank bottom). Depending on the type of tank (pressurized or non-pressurized tank), pressure measuring is related either to atmospheric pressure or pressure inside the tank.

Assembly and Usage

The CS-25 probe is mounted to the tank cover. A detailed description of assembly is presented in Technical Documentation.
The probe is designed to be connected to the following recording devices:

- analog input data recorder – current or voltage (current or voltage analog output probe).
- recorder or PC computer equipped with a serial RS-232C port (digital output probe).

APLISENS S.A., 03-192 Warszawa, ul. Morelowa 7, tel. 022 814-07-77
fax. 022 814-07-78, www.aplisens.pl, e-mail: aplisens@aplisens.pl

Technical Specification

Measuring range	0÷800mm H_2O (special ver. 0÷200…1400mm H_2O)
Pipe length L in tank	800mm (special ver. L=200÷1600mm)
Maximum overload	≤ 100kPa
Basic error	≤ 0.16%
Hysteresis, replicability	≤ 0.05%
Long-term stability	≤ 0.1% for two years
Working temperature range	-25 ÷ 80°C
Compensation temperature range	-25 ÷ 40°C
Output signal	4 ÷ 20mA for CS-25/I 0 ÷ 10V for CS-25/U 0 ÷ 5V, 0 ÷ 4.5V, 0 ÷ 2.5V – special ver. CS-25/U 100 ÷ 3800 bit for CS-25/RS 10 ÷ 36V in twin-wire system (for 4÷20mA output) 12 ÷ 30V for output = 0 ÷ 10V 8 ÷ 30V for output = 0 ÷ 5V 5 ÷ 5.5V for output = 0 ÷ 4.5V 3 ÷ 3.6V for output = 0 ÷ 2.5V 3 ÷ 3.3V for RS-232 output 3.6 ÷ 30V for RS-232 output 6.0 ÷ 36V for RS-232 output
Power voltage fluctuation error	0.05%
Housing protection degree	IP 67
Temperature fluctuation error	0.2% / 10°C

Ordering

Standard versions:
CS-25/I – measuring range: 0÷800mm H_2O, output signal: 4÷20mA, pipe length in tank L=800mm
CS-25/U - measuring range: 0÷800mm H_2O, output signal: 0÷10V, pipe length in tank L=800mm
CS-25/RS - measuring range: 0÷800mm H_2O, output signal: 100÷3800 bit, pipe length in tank L=800mm

Special versions:

CS-25/I, U or **RS / __ / __ / L= ... mm**

Measuring range___

Output signal_____

Pipe length in tank

Example 1:
Fuel level probe CS-25 standard version (measuring range 0÷800mm H_2O, pipe length in tank L=800mm) with voltage output 0÷10V
CS-25/U

Example 2:
Fuel level probe CS-25 special version (measuring range 0÷800mm H_2O, pipe length in tank L=800mm) with voltage output 0÷5V
CS-25/U/0÷5V

Example 3:
Fuel level probe CS-25 special version (measuring range 0÷1000mm H_2O, pipe length in tank L=1000mm) with current output 4÷20mA
CS-25/I/0÷1000mm H_2O /4÷20mA/L=1000mm

APLISENS S.A., 03-192 Warszawa, ul. Morelowa 7, tel. 022 814-07-77
fax. 022 814-07-78, www.aplisens.pl, e-mail: aplisens@aplisens.pl